# CUTTER - Rigging Diagram

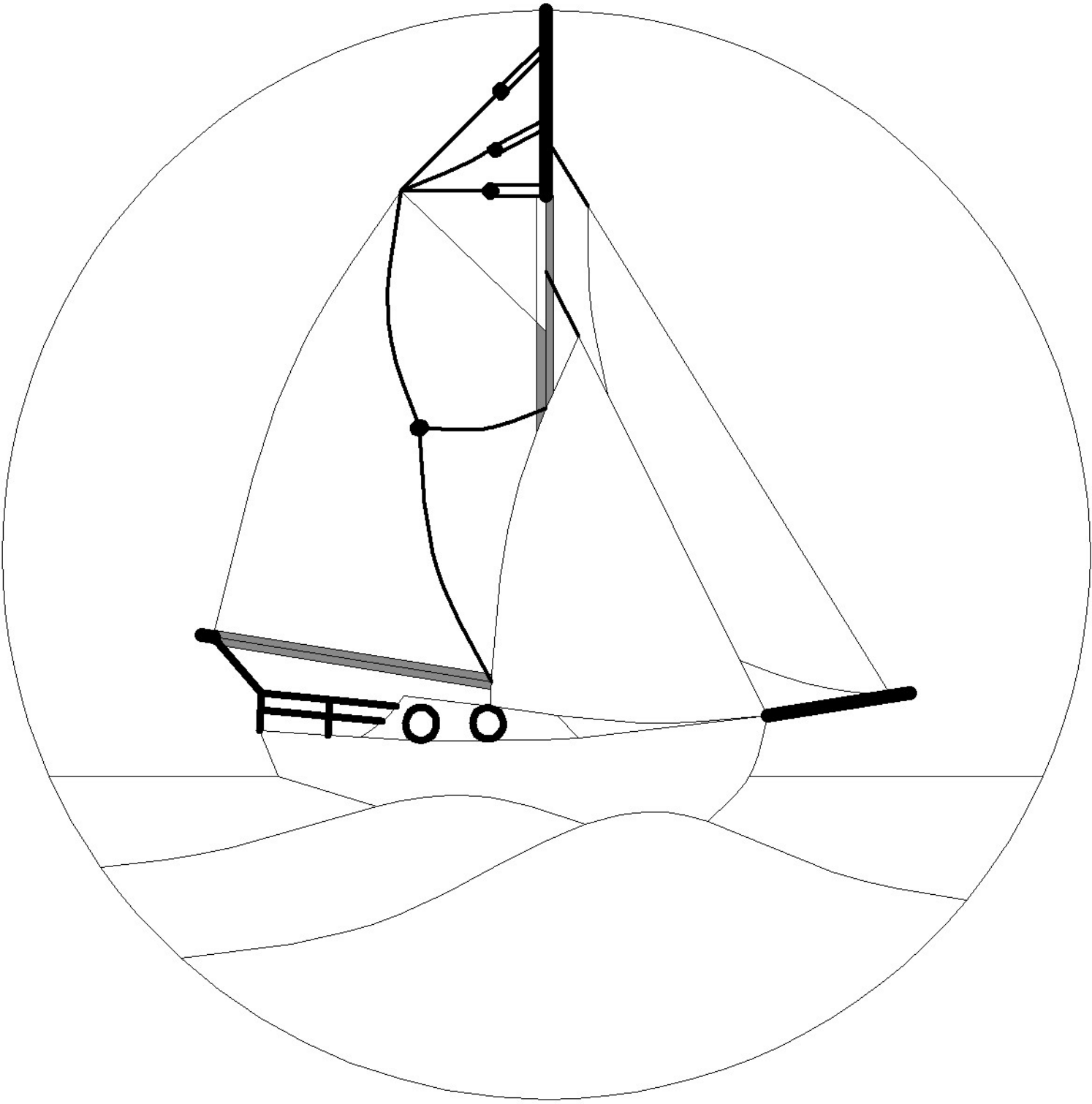

1/4 in. lead came

10 gauge copper wire

14 gauge copper wire

18 gauge copper wire